SUNPOWER

315 SOLAR PANEL

EXCEPTIONAL EFFICIENCY AND PERFORMANCE

BENEFITS

Highest Efficiency
Panel efficiency of 19.3% is the highest commercially available

More Power
SunPower 315 delivers 50% more power per unit area than conventional solar panels and 100% more than thin film solar panels

Reduces Installation Cost
More power per panel means fewer panels per install. This saves both time and money.

Reliable and Robust Design
Proven materials, tempered front glass, and a sturdy anodized frame allow panel to operate reliably in multiple mounting configurations

The SunPower 315 Solar Panel provides today's highest efficiency and performance. Utilizing 96 next generation SunPower all back-contact solar cells, the SunPower 315 delivers an unprecedented total panel conversion efficiency of 19.3%. The 315 panel's reduced voltage-temperature coefficient and exceptional low-light performance attributes provide outstanding energy delivery per peak power watt.

SunPower's High Efficiency Advantage - Up to Twice the Power

Comparable systems covering 1000 m² / 10,750 ft²			
	Thin Film	Conventional	SunPower
Watts / Panel	65	165	315
Efficiency	9.0%	12.0%	19.3%
kWs	**90**	**120**	**193**

SPR-315E-WHT

SUNPOWER

315 SOLAR PANEL

EXCEPTIONAL EFFICIENCY AND PERFORMANCE

Electrical Data

Measured at Standard Test Conditions (STC): irradiance of 1000/m², air mass 1.5g, and cell temperature 25° C

Peak Power (+/-5%)	Pmax	315 W
Rated Voltage	Vmp	54.7 V
Rated Current	Imp	5.76 A
Open Circuit Voltage	Voc	64.6 V
Short Circuit Current	Isc	6.14 A
Maximum System Voltage	IEC, UL	1000 V, 600 V
Temperature Coefficients		
	Power	-0.38% /°C
	Voltage (Voc)	-176.6 mV/°C
	Current (Isc)	3.5 mA/°C
Series Fuse Rating		15 A
Peak Power per Unit Area		193 W/m², 17.9 W/ft²
CEC PTC Rating		291.6 W

IV Curve

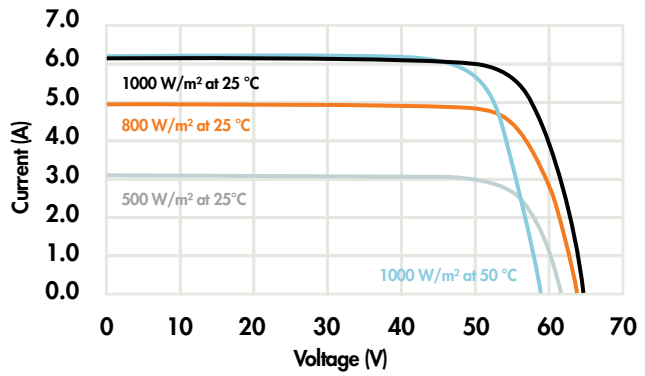

Current/voltage characteristics with dependence on irradiance and module temperature.

Mechanical Data

Solar Cells	96 SunPower all back-contact monocrystalline
Front Glass	4.0mm (5/32 in) tempered
Junction Box	IP-65 rated with 3 bypass diodes
Output Cables	900 mm length cables / Multi-Contact connectors
Frame	Anodized aluminum alloy type 6063
Weight	24 kg, 53 lbs

Tested Operating Conditions

Temperature	–40° C to +85° C (–40° F to +185° F)
Max load	50 psf (2400 Pascals) front and back
Impact Resistance	Hail – 25 mm (1 in) at 23 m/s (52 mph)

Warranty and Certifications

Warranty	25 year limited power warranty
	10 year limited product warranty
Certifications	IEC 61215 , Safety tested IEC 61730;
	UL listed (UL 1703), Class C Fire Rating

Dimensions

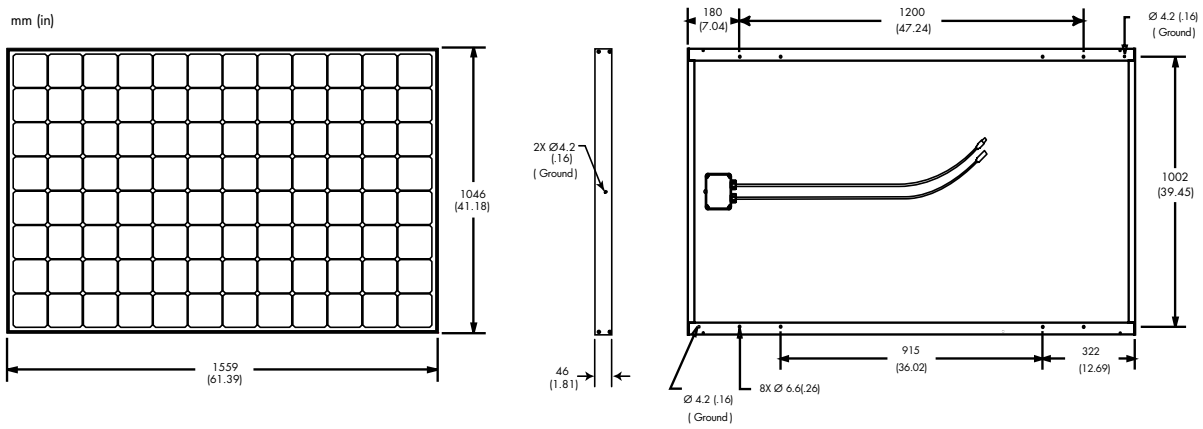

CAUTION: READ SAFETY AND INSTALLATION INSTRUCTIONS BEFORE USING THE PRODUCT. Go to www.sunpowercorp.com/panels for details

About SunPower

SunPower designs, manufactures and delivers high-performance solar electric technology worldwide. Our high-efficiency solar cells generate up to 50 percent more power than conventional solar cells. Our high-performance solar panels, roof tiles and trackers deliver significantly more energy than competing systems.

© January 2008 SunPower Corporation. All rights reserved. Specifications included in this datasheet are subject to change without notice.

Document #001-12906 Rev*C

Printed on recycled paper