GSW730M

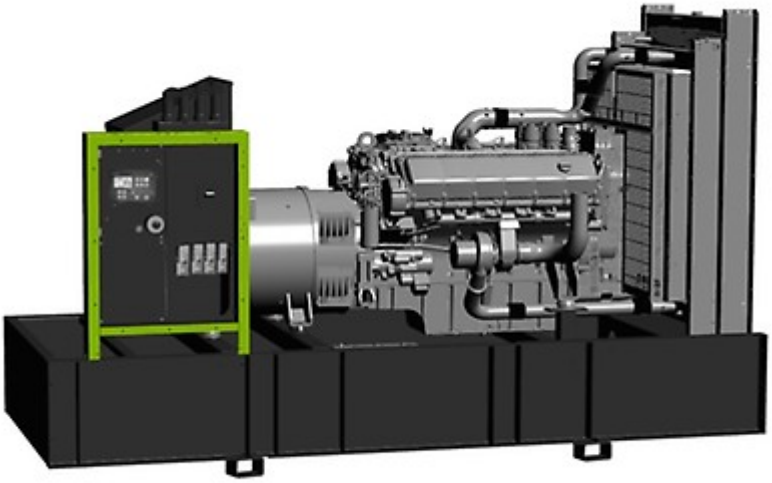

Main Features		
Frequency	Hz	50
Voltage	V	400
Power factor	cos ϕ	0.8
Phase and connection		3

Power Rating		
Standby power LTP	kVA	727.29
Standby power LTP	kW	581.83
Prime power PRP	kVA	658.92
Prime power PRP	kW	527.14

Ratings definition (According to standard ISO8528 1:2005)

PRP - Prime Power:
It is defined as being the maximum power which a generating set is capable of delivering continuously whilst supplying a variable electrical load when operated for an unlimited number of hours per year under the agreed operating conditions with the maintenance intervals and procedures being carried out as prescribed by the manufacturer. The permissible average power output over 24 h of operation shall not exceed 70 % of the prime power.

LTP - Limited-Time running Power:
It is defined as the maximum power available, under the agreed operating conditions, for which the generating set is capable of delivering for up to 500 h of operation per year (whose no more than 300 for continuative use) with the maintenance intervals and procedures being carried out as prescribed by the manufacturers. No overload capability is available.

www.pramac.com

Engine specifications		
Engine manufacturer		MTU
Model		12V1600G20F
Engine cooling system		Water
Nr. of cylinder and disposition		12 V
Displacement	cm³	21000
Aspiration		Turbocharged intercooled
Speed governor		Electronic
Prime gross power PRP	kW	576
Maximum gross power LTP	kW	634
Oil capacity	l	72.5
Lube oil consumption @ PRP (max)	%	0.5
Coolant capacity	l	99
Fuel		Diesel
Specific fuel consumption @ 75% PRP	g/kWh	205
Specific fuel consumption @ PRP	g/kWh	208
Starting system		Electric
Starting engine capability	kW	8
Electric circuit	V	24

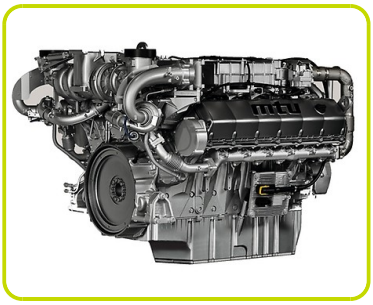

Engine equipment

• Electric starter
• Set of dry-type air filters with contamination indicator
• Fuel delivery pump
• Fuel main filter
• Fuel priming pump for initial system filling and venting
• Closed fuel system
• Lube oil circulation pump with safety valve
• Lube oil multi-stage filter
• Lube oil heat exchanger
• Oil filter neck and oil dipstick for measurement on non-running engine
• Electronic engine management system "ADEC"
• Front-type radiator for jacket water and charge air cooling circuit with integrated expansion tank

www.pramac.com

Alternator Specifications		
Brand		Mecc Alte
Model		ECO40-2L/4
Voltage	V	400
Frequency	Hz	50
Power factor	cos ϕ	0.8
Type		Brushless
Poles		4
Voltage regulation system		Electronic
Standard AVR		DER1-A
Voltage tolerance	%	1
Efficiency @ 75% load	%	94.7
Class		H
IP protection		21

Mechanical structure
Robust mechanical structure which permits easy access to the connections and components during routine maintenance check-ups.

Voltage regulator
Voltage regulation with DER 1. The digital DER 1 is a Digital controlled regulator, based on DSP (Digital Signal Processor) that combines function as Voltage Regulation and Alternator Protections and Diagnostic into a very small single board.

Voltage supply: 40Vac÷270Vac
Maximum continuous output current: 4Adc
Frequency range: 12Hz÷72Hz
Single phase sensing automatic recognition
Average value of voltage regulation
Voltage regulation range (sensing) from 75Vac to 300Vac
Precision of voltage regulation: ± 1% from no-load to nominal load in static condition, with any power factor and for frequency variations ranging from -5% to +20% of the nominal value.
Precision of voltage regulation: ± 0,5% in stabilized conditions (load, temperature).
Transient voltage drop and overvoltage within ± 15%
Voltage recovery time within ± 3% of the value set, in less than 300 msec.
Underspeed protection with adjustable threshold and slope
Overvoltage and undervoltage alarms
Excitation overcurrent protection with delayed intervention
Allarm conditions storage (type of alarm, number of events, duration of the last event, total time)
Memorization of the regulator operation time

Windings / Excitation system
Generator stator is wound to 2/3 pitch. This eliminates triplen (3rd, 9th, 15th …) harmonics on the voltage waveform and is found to be the optimum design for trouble-free supply of non-linear loads. The 2/3 pitch design avoids excessive neutral currents sometimes seen with higher winding pitches. MAUX (Standard): The MAUX MeccAlte Auxiliary Winding is a separate winding within the main stators that feeds the regulator. This winding enables to take an overload of 300% forced current (short circuit maintenance) for 20 seconds. This is ideal for motor starting requirements. PMAUX (optional): Alternator can be equipped with the optional PMAUX (Permanent Magnet Generator) which matches the performance and is capable of supporting both linear and distorted loads.

Insulation / Impregnation
Insulation is of class H standard. Impregnation is made with premium tropicalised epoxy resins by dipping and dripping. High voltage parts are impregnated by vacuum, so the insulation level is always very good. In the high-power models, the stator windings undergo a second insulation process. Grey protection is applied on the main and exciter stator to give enhanced protection.

Reference standards
Alternator manufactured according to , and complies with , the most common specification such as CEI 2-3, IEC 34-1, EN 60034-1, VDE 0530, BS 4999-5000, CAN/CSA-C22.2 No14-95-No100-95.

www.pramac.com

Genset equipment

BASE FRAME MADE OF WELDED STEEL PROFILE, COMPLETE WITH:

• Anti-vibration mountings properly sized

• Welded or Screwed support legs. (according to canopy size)

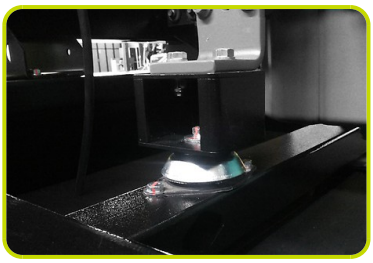

PLASTIC FUEL TANK WITH THE FOLLOWING COMPONENT:

• Filler neck

• Air breather (ventilation pipe)

• Minimum fuel level sensor

MANUAL OIL DRAININ PUMP:

• Oil draining facilities

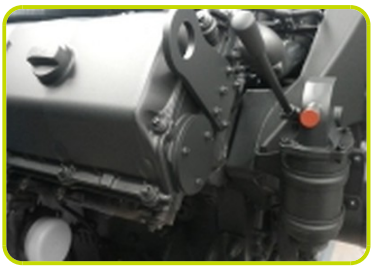

ENGINE COMPLETE WITH:

• Battery

• Liquids (no fuel)

PROTECTIONS:

• Moving and rotating parts protection against accidental contacts

LIFTING:

• Lifting points frame structure.

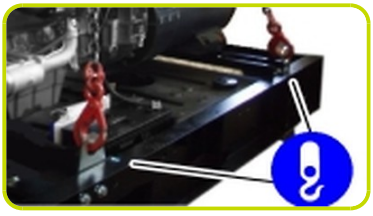

EXHAUST (STANDARD):

• Industrial silencer (loose)

www.pramac.com

Dimensional data		
Length	(L) mm	3811
Width	(W) mm	1670
Height	(H) mm	2322
Dry weight	Kg	5200
Fuel tank capacity	l	636

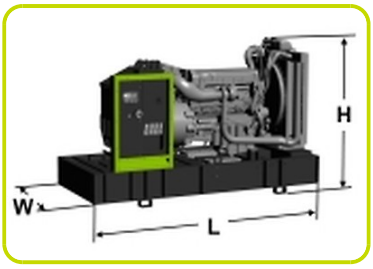

Autonomy		
Fuel consumption @ 75% PRP	l/h	106.03
Fuel consumption @ 100% PRP	l/h	142.63
Running time @ 75% PRP	h	6.00
Running time @ 100% PRP	h	4.46

Installation data		
Total air flow	m³/min	739.80
Exhaust gas flow @ PRP	m³/min	102
Exhaust gas temperature @ LTP	°C	480

Data Current		
Battery capacity	Ah	180
MAX current	A	1049.78
Circuit breaker	A	1250

Control panel availability	
AUTOMATIC CONTROL PANEL	ACP
MODULAR PARALLEL PANEL	MPP

www.pramac.com

ACP - Automatic control panel

Mounted on the genset, complete with digital control unit for monitoring, control and protection of the generating set, protected through door with lockable handle

DIGITAL INSTRUMENTATION
- Generating set voltage (3 phases)
- Mains voltage
- Generating set frequency
- Generating set current (3 phases)
- Battery voltage
- Power (kVA - kW - kVAr)
- Power factor Cos φ
- Hours-counter
- Engine speed r.p.m.
- Fuel level (%)
- Engine temperature (depending on model)

COMMANDS AND OTHERS
- Four operation modes: OFF - Manual starting - Automatic starting - Automatic test
- Pushbutton for forcing Mains contactor or Genset contactor
- Push-buttons: start/stop, fault reset, up/down/page/enter selection
- Remote starting availability
- DC system disconnection switch
- Acoustic alarm
- Automatic battery charger
- RS232 Communication port
- Settable PASSWORD for protection level

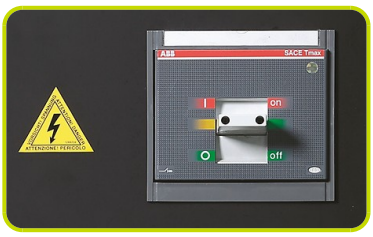

PROTECTIONS WITH ALARM
- Engine protections: low fuel level, low oil pressure, high engine temperature
- Genset protections: under/over voltage, overload, under/over frequency, starting failure, under/over battery voltage

PROTECTIONS WITH SHUTDOWN
- Engine protections: low fuel level, low oil pressure, high engine temperature
- Genset protection: under/over voltage, overload, under/over battery voltage, battery charger failure
- Circuit breaker protection: III poles
- Earth Fault included in the control unit

OTHERS PROTECTIONS
- Emergency stop button

OUT PUT PANEL ACP

Predisposed for remote control optional:	RCG
External Terminal Board (ETB)	Standard
Socket kit	Optional

www.pramac.com

MPP - Modular parallel panel

Mounted on the genset, complete with digital control unit InteliVision5 for monitoring, control, protection and load sharing for both single and multiple gen-sets operating in standby or parallel modes (up to 32 gen-sets in island).

DIGITAL INSTRUMENTATION
- Mains: voltage, Intensity, Frequency.
- Mains kW - kVAr -Power factor Cos f.
- Genereting set voltage (3 phases).
- Generating set frequency.
- Generating set current (3 phases).
- Generating set Power (kVA - kW - kVAr).
- Generating set Power factor Cos f.
- Generating set kWh and kVAh.
- Battery voltage.
- Hours-counter.
- Engine speed r.p.m.
- Fuel level (%).
- Engine temperature (depending on model).
- Oil pressure (depending on model).

COMMAND AND OTHERS
- Graphical display 320x240 pixels.
- Operation modes: OFF - AMF function - Single Parallel to mains Island application - Single Parallel to Mains AMF application - Mulitple parallel genset Island application.
- Pushbutton for forcing Mains Breaker/contactor or Genset Breaker/contactor.
- Push-buttons: start/stop, fault reset, up/down/page/enter selection.
- Multiple parallel and Power Management operation with digital load AVR sharing.
- Automatic synchronizing and power control (via speed goveroner or ECU)
- Baseload Import/Export and Peak shaving
- Voltage and PF control (AVR).
- Configurable digital I/O (12/12) and analogue inputs (3).
- Integrate PLC programmable functions.
- Event-based history (up to 500records).
- Selectable measurment range 120/277V and 0-1/0-5A.
- Remote starting and Blocking signal availability.
- DC system disconnection switch.
- Acoustic alarm.
- Automatic battery charger.
- 2xRS232/RS485/USB Comuncation ports.
- Setable PASSWORD for protection level.

PROTECTION WITH ALARM AND SHUTDOWN
- Engine protections: low fuel level, low oil pressure, high engine temperature.
- Genset protections: under/over voltage, overload, under/over frequency, starting failure, under/over battery voltage
- Others: overcurrent, shortcircuit, reverse power, Earth fault

OTHERS PROTECTION:
- Circuit breaker protection: IV poles Motorized.
- Emergency stop button.

OUT PUT PANEL MPP

Multi-pin connectors (in and out) for parallel with other generators	n	2
Connecting cable with 2 connectors multipin (length 10m)	n	1
ETB External terminal board		ETB

www.pramac.com

Supplements:		
Only Available when order		:

CONTROL PANEL SUPPLEMENT

RCG - Various supplements for remote controls - available for models:	ACP MPP
TLP - Various supplements for remote signals - available for models:	ACP MPP
ADI - Adjustable Differential Intensity - available only for models:	ACP
TIF - IV Poles Circuit Breaker instead of III - available for models:	ACP

Socket kit

Kit SKB or Kit SKC (for total n. 4 socket) - avaliable for model:		ACP
Individual CB and Earth Fault protection		
3P+N+T 400V 63A	n	1
3P+N+T CEE 400V 32A	n	1
230V/16A SCHUKO	n	1
With version SKB:		
3P+N+T CEE 400V 16A	n	1
With version SKC:		
400V/125A 3P+N+T CEE	n	1

GENSET EQUIPMENT

AFP - Automatic Fuel Pump	ACP MPP

ENGINE SUPPLEMENTS

PHS - Coolant Pre-Heating System - available for models:	ACP MPP

www.pramac.com

Accessories
Items available as accessory equipment
RES - Residential silencer
FEC - Flexible Exhaust Compensator Bellow and flanges

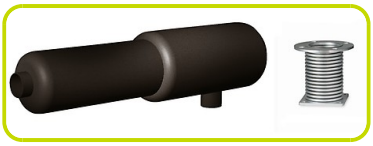

LTS - LOAD TRANSFER SWITCH - Accessories ACP

Automatic under-load change-over (AC22, AC23) from and to any of positions "1", "0", "2" both electrical and manual (emergency change-over), transfer function with direct transition from position "1" to position "2" and vice versa.
• Safety: locking by padlock preventing any electrical or manual operation, key lock for the selection of electrical or manual operation.- Quick operating time from pos. "1" to "2" and vice versa.
• Easy and fast electrical connections by means of terminal blocks of quick connection type.
• Conformity to standards: IEC 60947-1 IEC 60947-3, CEI EN 60947-1 / CEI EN 60947-3IEC 439-1, CEI EN 60439-1IEC 204-1, CEI EN 60204-1, VDE 0660 Teil 107

NOMINAL CURRENT & DIMENSIONS PANEL LTS (standard*)

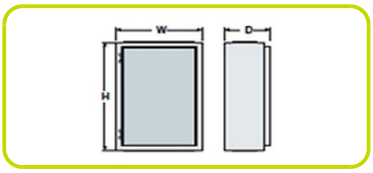

Nominal Current	A	1250
Width	(W) mm	1000
Height	(H) mm	800
Depth	(D) mm	450
Weight	Kg	250
* = Available electrical power more		

www.pramac.com

The information is aligned with the Data file at the time of download. Printed on 29/10/2016 (ID 1748)

©2016 | PR INDUSTRIAL s.r.l. | All rights reserved | Image shown may not reflect actual package. Specifications subject to change without notice